Technical Data
Plan View

Dimensions

Exterior Dimensions (Inches)	72.75" x 30" x 37.25"
Interior Dimensions (Inches)	69" x 24" x 24"
Packaging Dimensions (Inches)	75.4" x 33.5" x 37.7"
Capacity (cu. ft.)	23 cu. ft.
Gross Weight (lbs)	353 lbs

Construction

Exterior Material	430 series stainless steel
Interior Material	430 series stainless steel
Insulation Material	Polyurethane
Insulation Thickness (mm)	45
# of Doors	3
# of Shelves	3
Shelf Material	Plastic coated steel
Shelf Load Capacity (lbs/pc)	155 lbs

Cooling

Temperature Range	33º ~ 40º F
Refrigerant	R290
Refrigerant Amount (oz)	11.6
Maximum Ambient Temperature Rating	90º F
Defrost Method	Air Defrost
Defrost Power (W)	500
Cooling Method	Ventilated
Temperature Controller	Thermostat
Compressor H/P	1/3

Electrical

Voltage (v/Hz)	115/60
Power (W)	390
Power Consumption (kw/24hr)	1.7
Phase	1

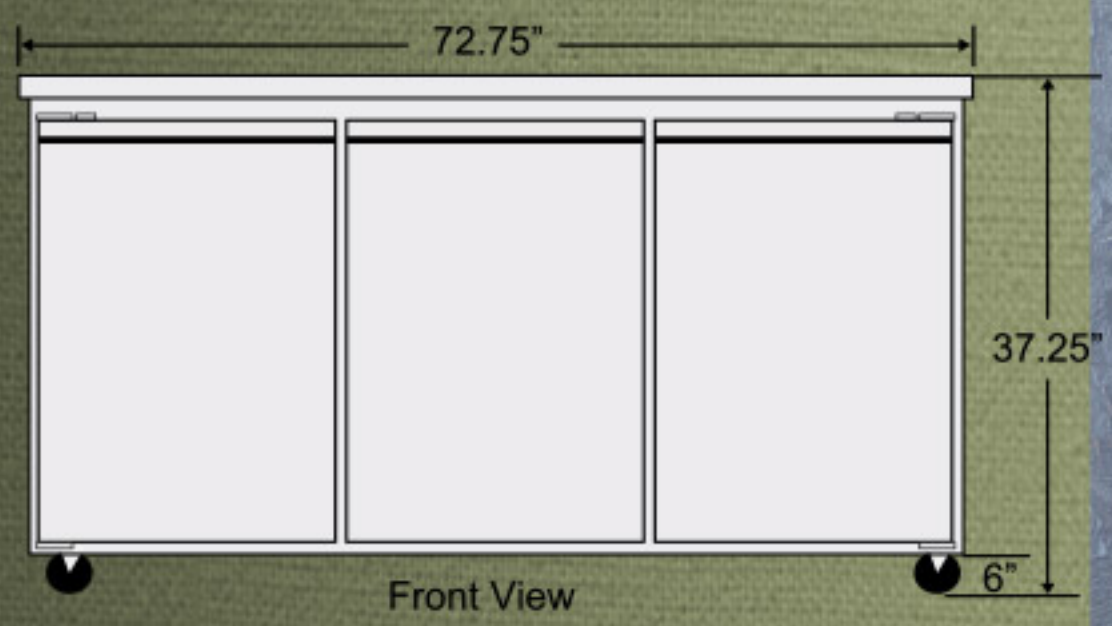

Front View

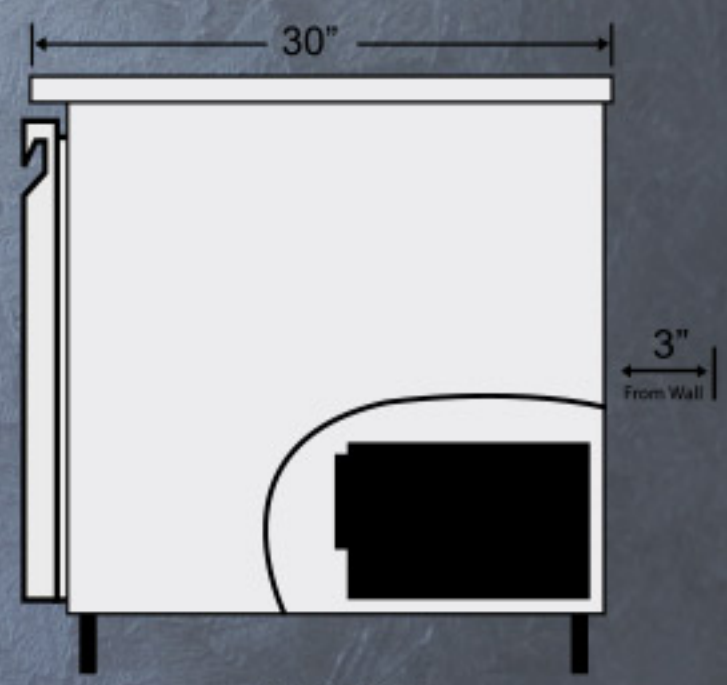

Side View

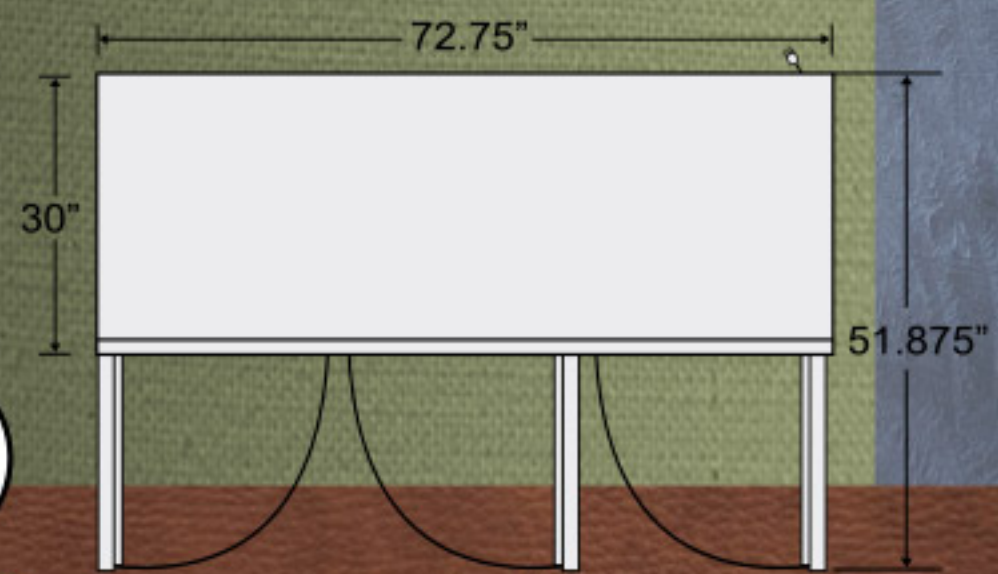

Top View

NEMA 5-15P

C US

COMPLIES WITH ANSI/NSF 7
FOR FOOD SERVICE

BUR-72

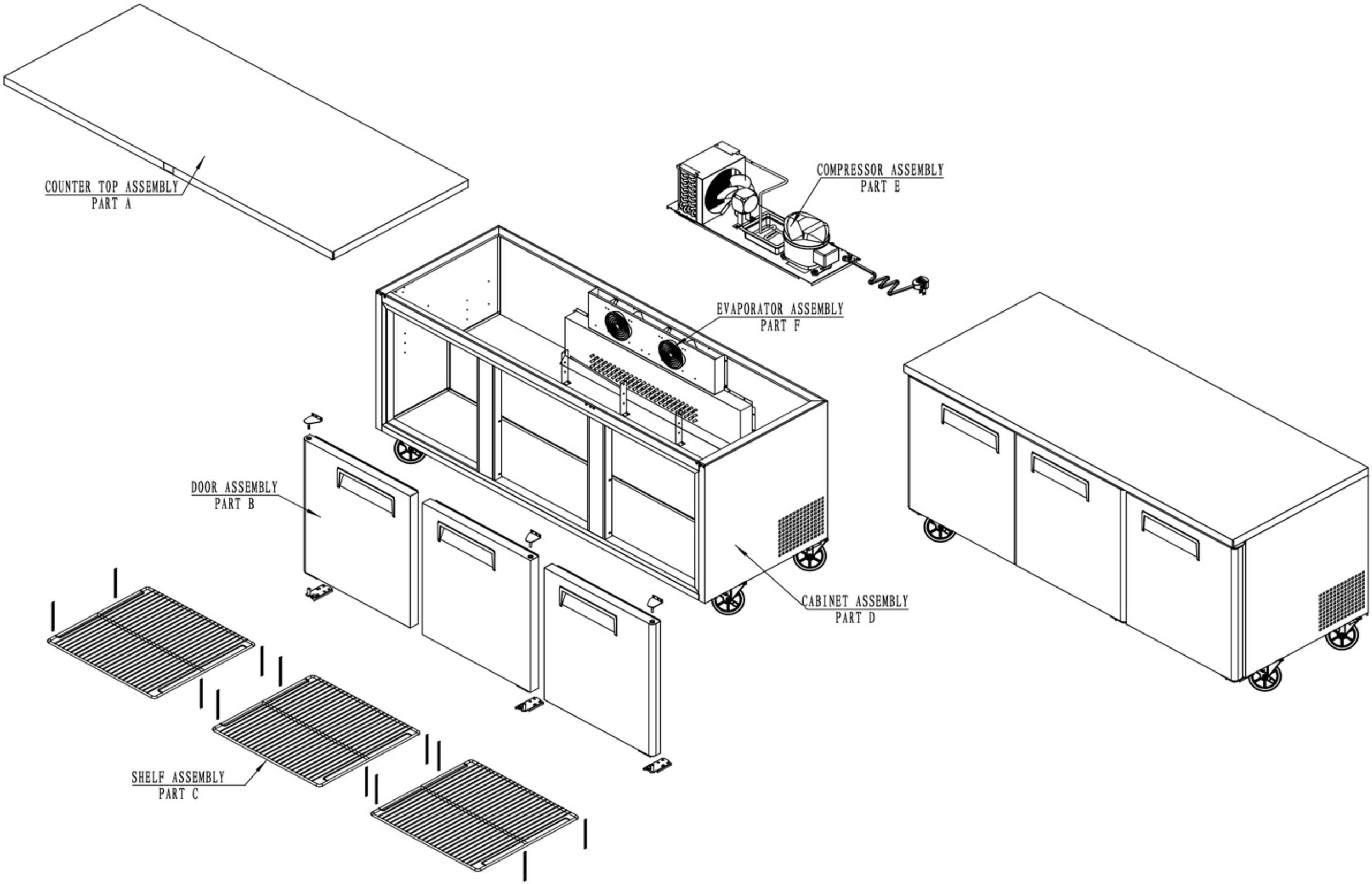
COUNTER TOP ASSEMBLY
PART A
COMPRESSOR ASSEMBLY
PART E
EVAPORATOR ASSEMBLY
PART F
DOOR ASSEMBLY
PART B
CABINET ASSEMBLY
PART D
SHELF ASSEMBLY
PART C

BUR-72 Counter Top Assembly

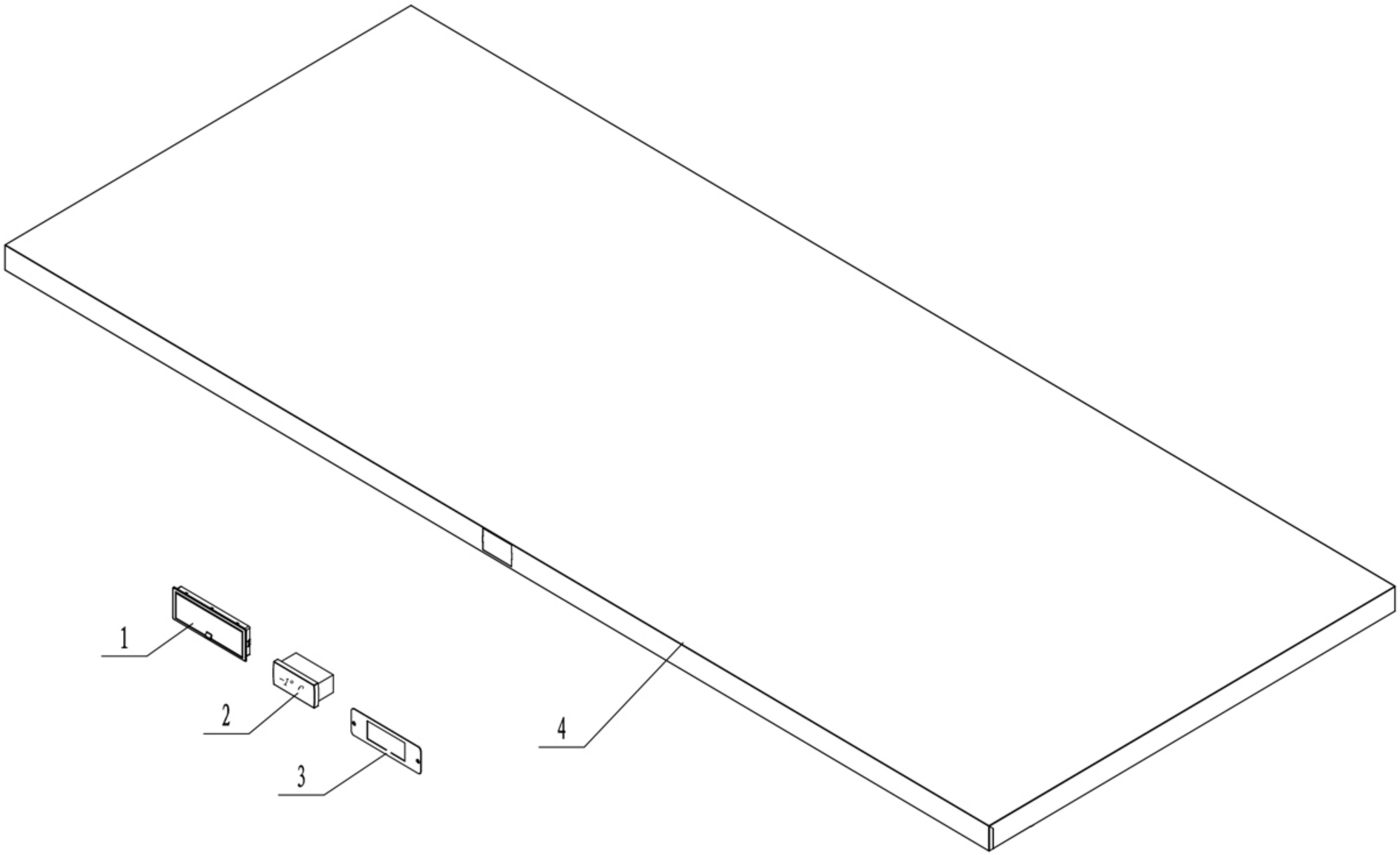

4	MGF8404FF01		1	Counter Top Body				
3	83032302		1	Bracket For Controller Displayer				
2	W0302024		1	Displayer of The Controller				
1	W0409878		1	Cover For Controller				

BUR-72 Door Assembly

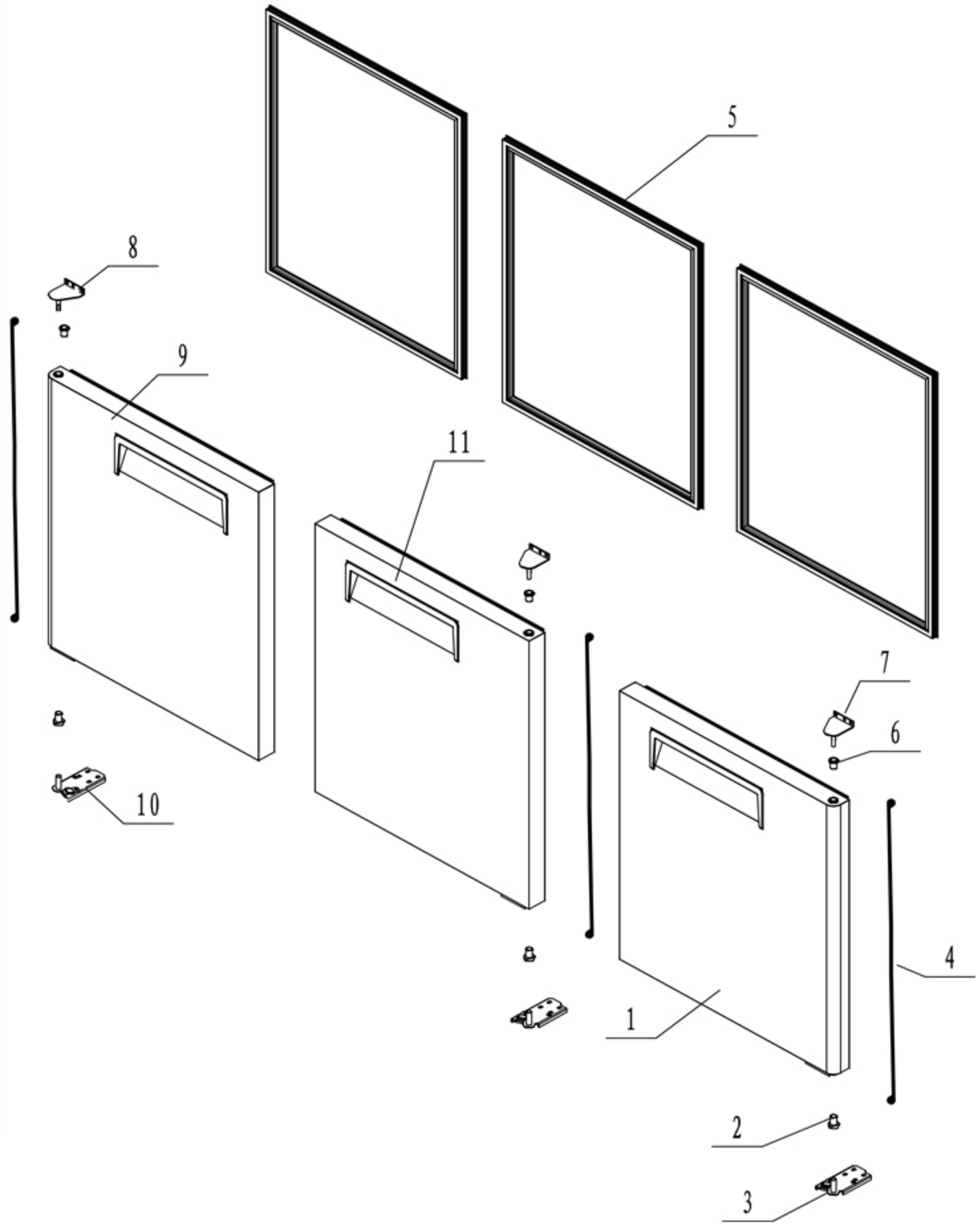

11	MSF8304FC02		1	Door Body Assembly-Middle				
10	W0604029		1	Left-Bottom Hinge				
9	MSF8304FC01		1	Door Body Assembly-Left				
8	W0604027		1	Left-Top Hinge				
7	W0604026		2	Right-Top Hinge				
6	W0409845		3	Door Shaft Sleeve-Top				
5	W0404520		3	Door Gasket				
4	W0604922		3	Door Spring Rod				
3	W0604028		2	Right-Bottom Hinge				
2	W0409843		3	Door Shaft Sleeve-Bottom				
1	MSF8304FC03		1	Door Body Assembly-Right				

BUR-72 Shelf Assembly

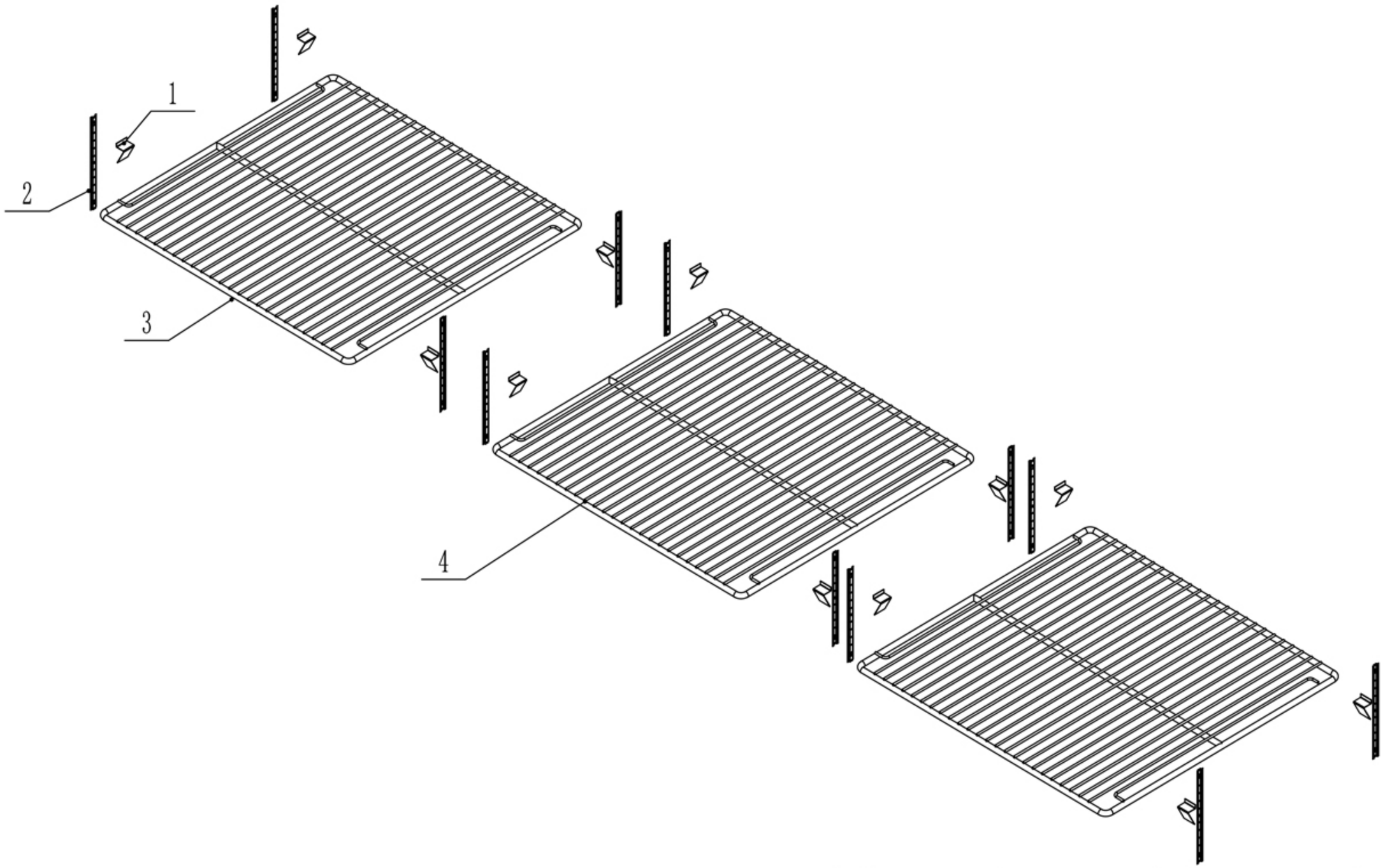

4	W0402570		1	Shelf(M)				
3	W0402171		2	Shelf (L/R)				
2	24432012		12	Pilaster For Shelf				
1	66490313		12	Shelf Support Clip				

BUR-72 Cabinet Assembly

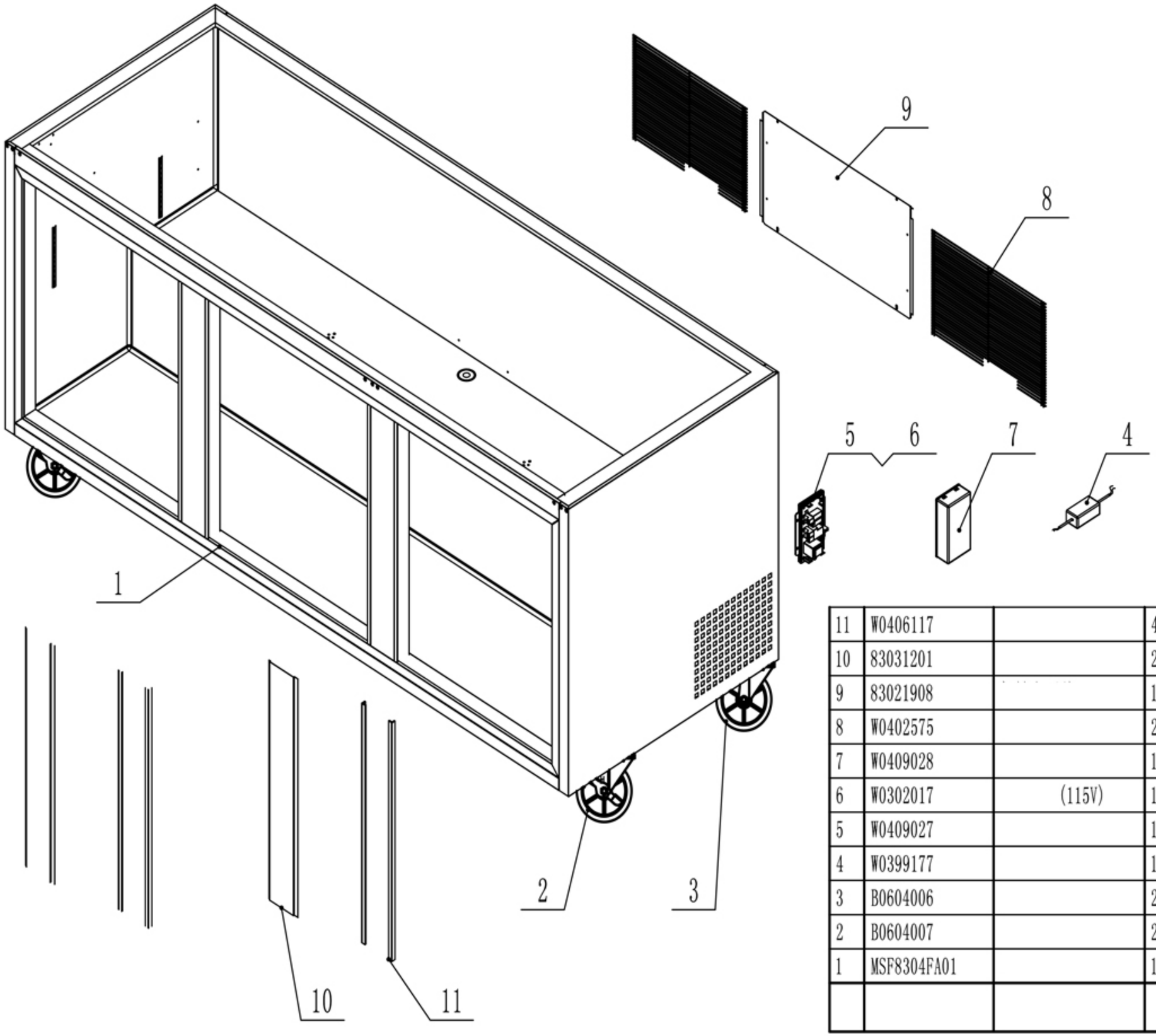

11	W0406117		4	Middle Mullion Frame Strip				
10	83031201		2	Middle Mullion Front Plate				
9	83021908		1	Rear Protect Cover				
8	W0402575		2	Rear Protect Barrier				
7	W0409028		1	Controller Protect Cover				
6	W0302017	(115V)	1	Digital Controller-Main Part				
5	W0409027		1	Controller Protect Cover				
4	W0399177		1	Power Supply				
3	B0604006		2	Castor-5″ Wheel				
2	B0604007		2	Castor-5″ Wheel With Braket				
1	MSF8304FA01		1	Cabinet Body				

BUR-72 Evaporator Assembly

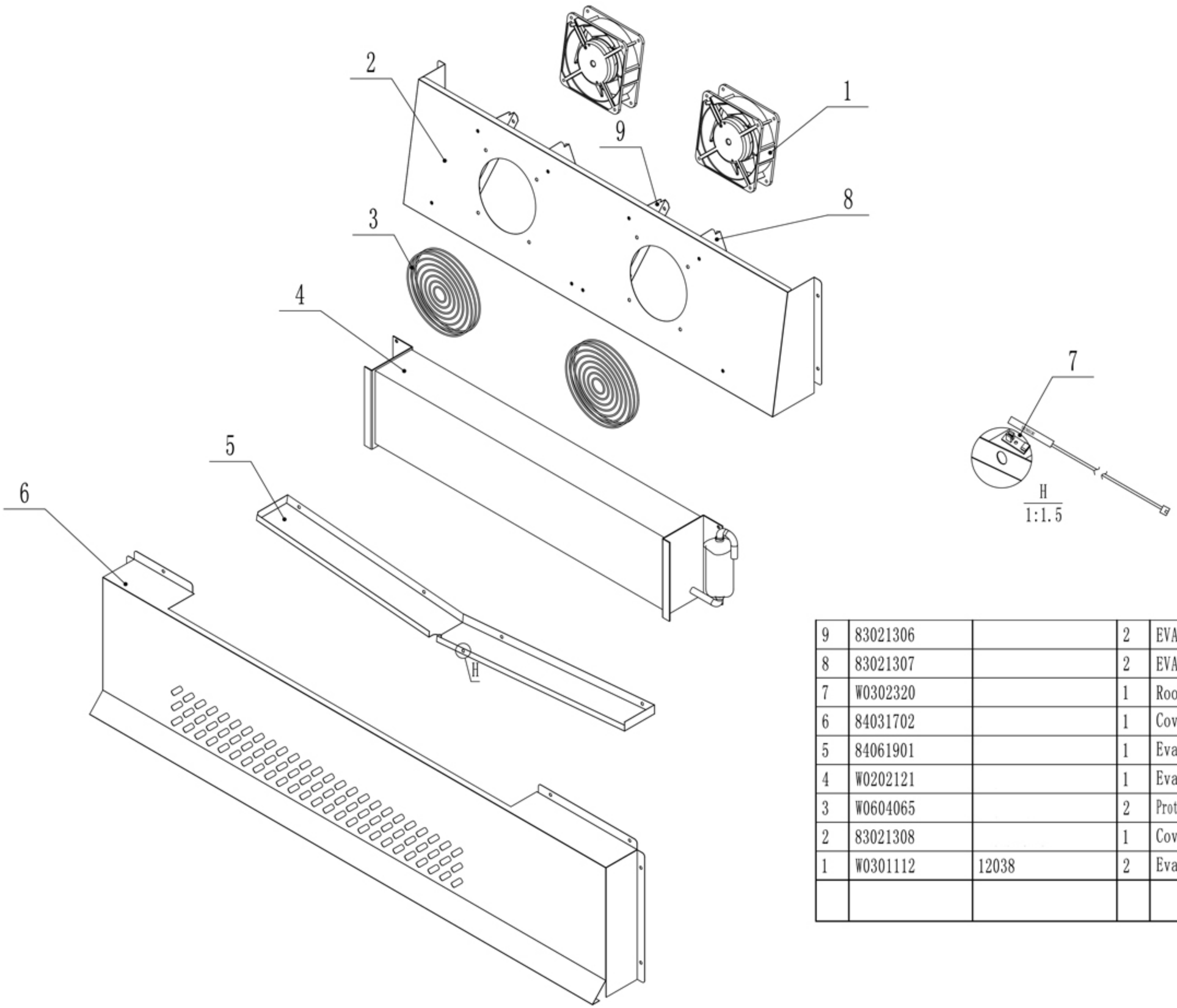

9	83021306		2	EVAP AIR GUIDE(L)			SUS430-2B	
8	83021307		2	EVAP AIR GUIDE(R)			SUS430-2B	
7	W0302320		1	Room Sensor Probe				
6	84031702		1	Cover For Evaporator			SUS430-2B	
5	84061901		1	Evaporator Drain Pan			SUS430-2B	
4	W0202121		1	Evaporator			CU	
3	W0604065		2	Protect Grid For Evap Motor				
2	83021308		1	Cover For Evap Motor			SUS430-2B	
1	W0301112	12038	2	Evaporator Motor			MQ12038HBL24V	

BUR-72 Compressor Assembly

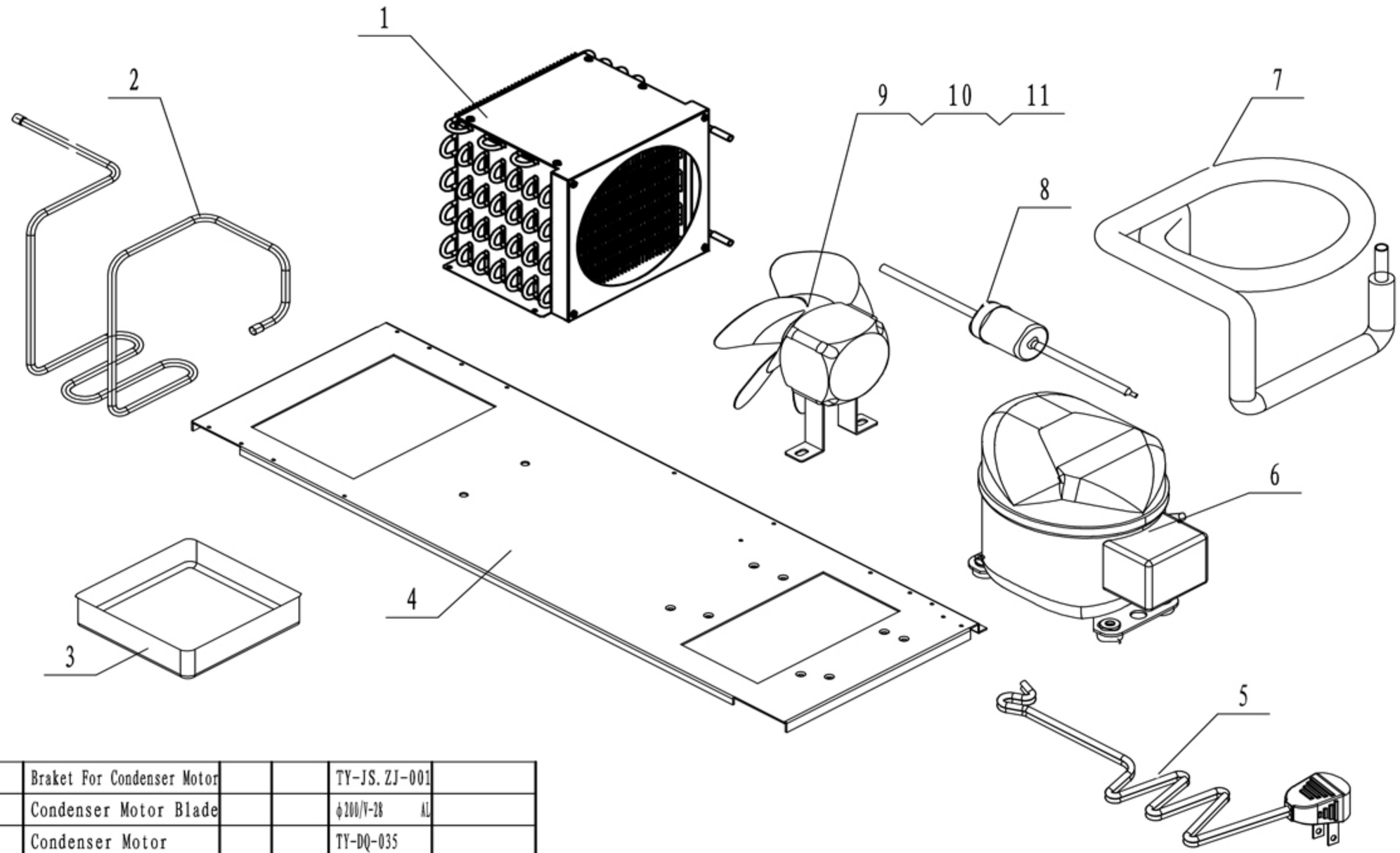

11	W0604079		1	Braket For Condenser Motor			TY-JS.ZJ-001	
10	W0301060		1	Condenser Motor Blade			ϕ200/V-28 AL	
9	W0301905		1	Condenser Motor			TY-DQ-035	
8	W0204003		1	Dryer Filter			XFL-032S	
7	W0210582	(B)	1	Suction Tube B with Capillary			CU	
6	W0201164		1	Compressor			R290	
5	W0305134		1	Power Cord			NEMAL5-15P	
4	83022105		1	Board For Comp Assembly				
3	W0411206		1	Bottom Evap-Water Pan			ABS	
2	W0210351		1	Coil-Pipe Radiator			CU	
1	W0203048		1	Condenser			CU	