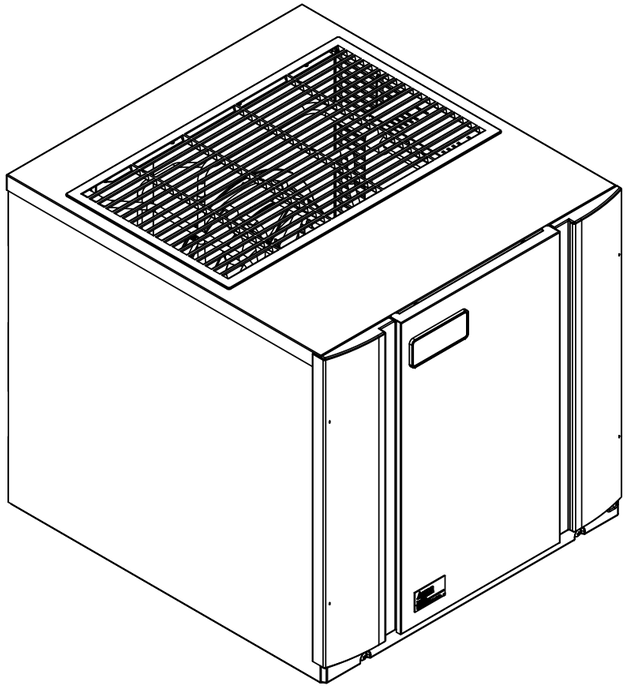

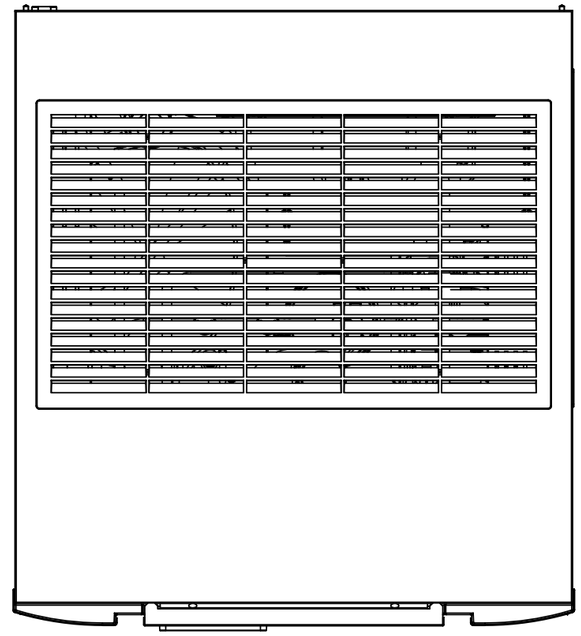

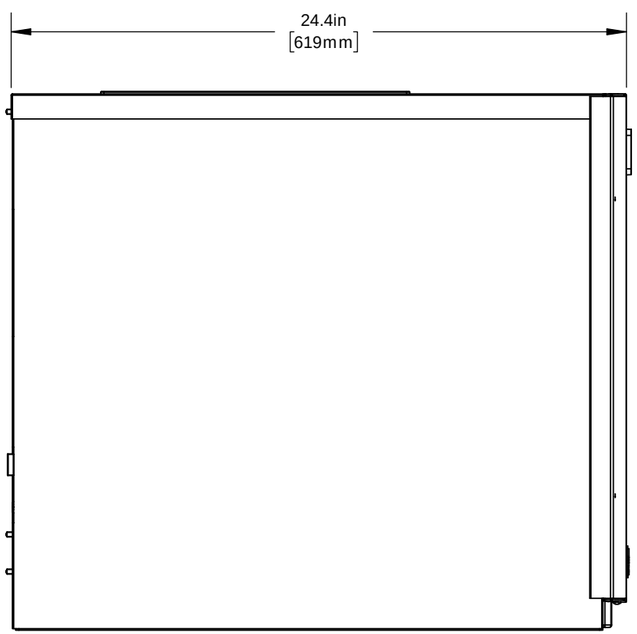
24.4in
[619mm]

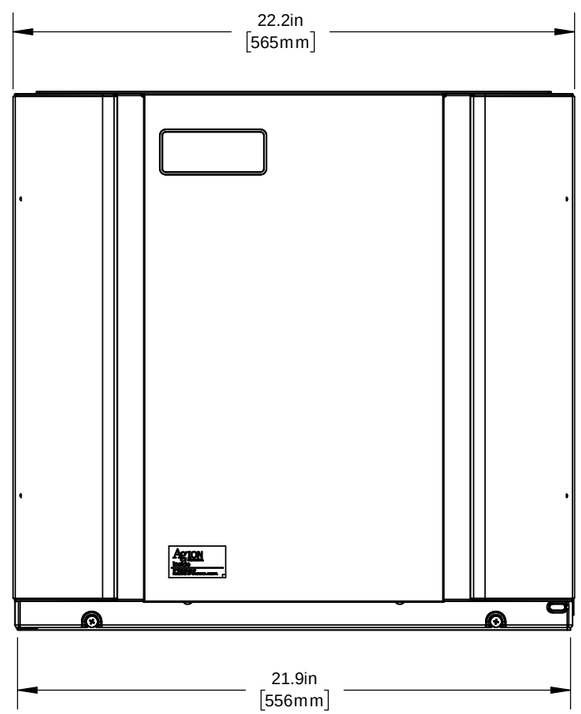
22.2in
[565mm]
21.9in
[556mm]

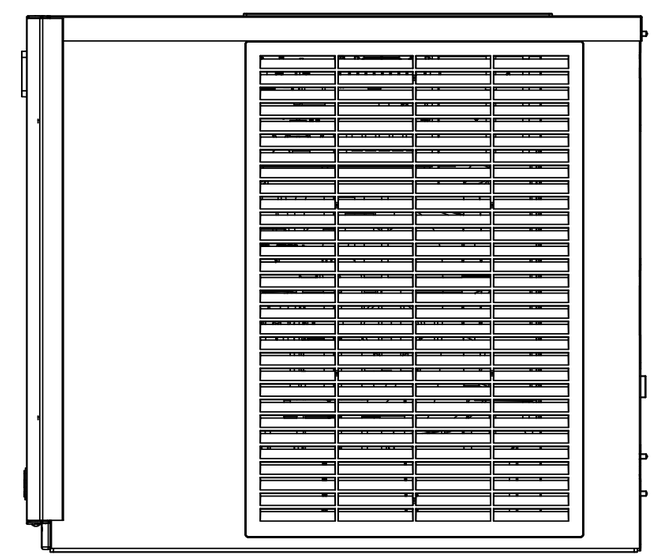

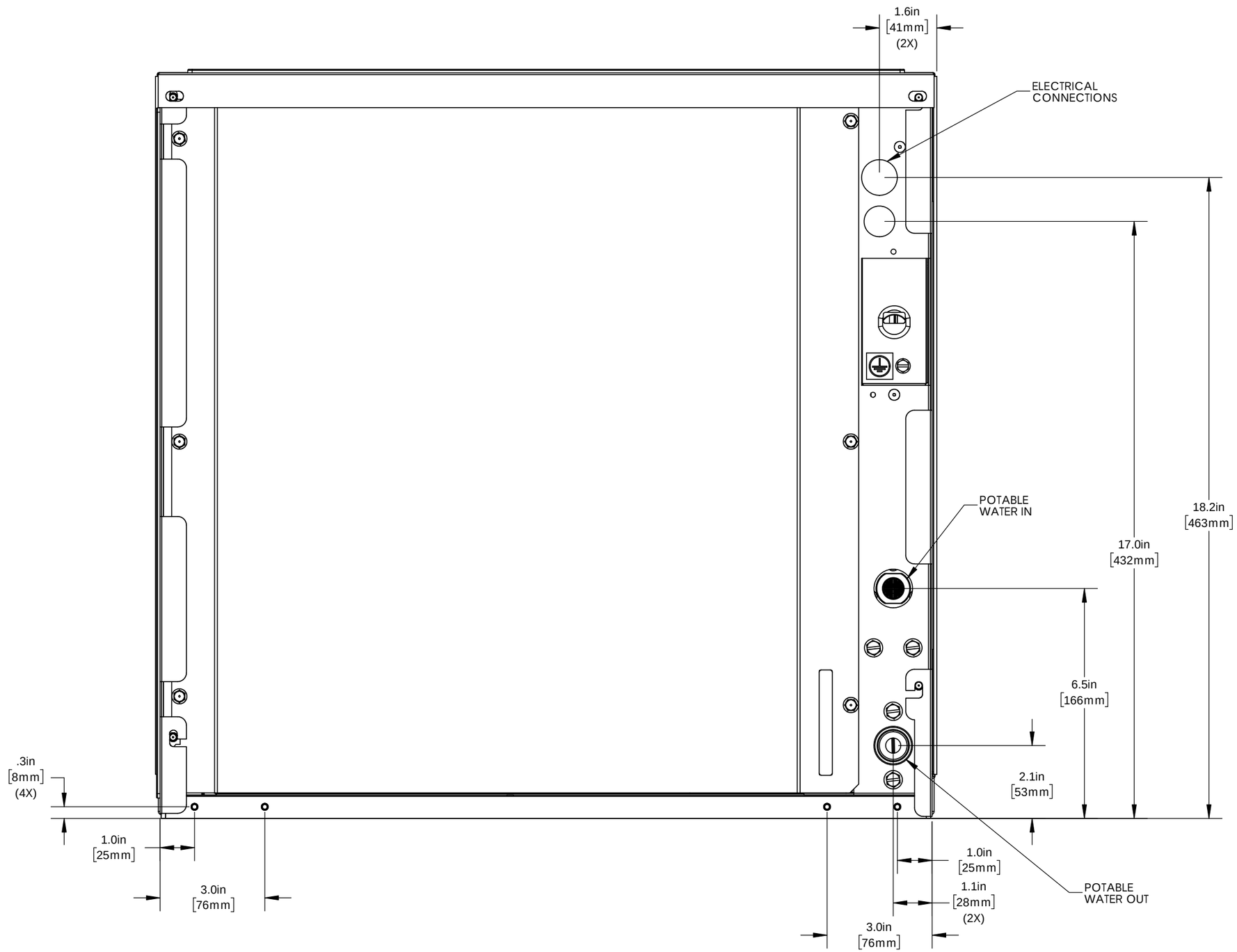
1.6in
[41mm]
(2X)
ELECTRICAL
CONNECTIONS
POTABLE
WATER IN
18.2in
[463mm]
17.0in
[432mm]
6.5in
[166mm]
2.1in
[53mm]
.3in
[8mm]
(4X)
1.0in
[25mm]
3.0in
[76mm]
1.0in
[25mm]
1.1in
[28mm]
(2X)
3.0in
[76mm]
POTABLE
WATER OUT